RF ID Receiver
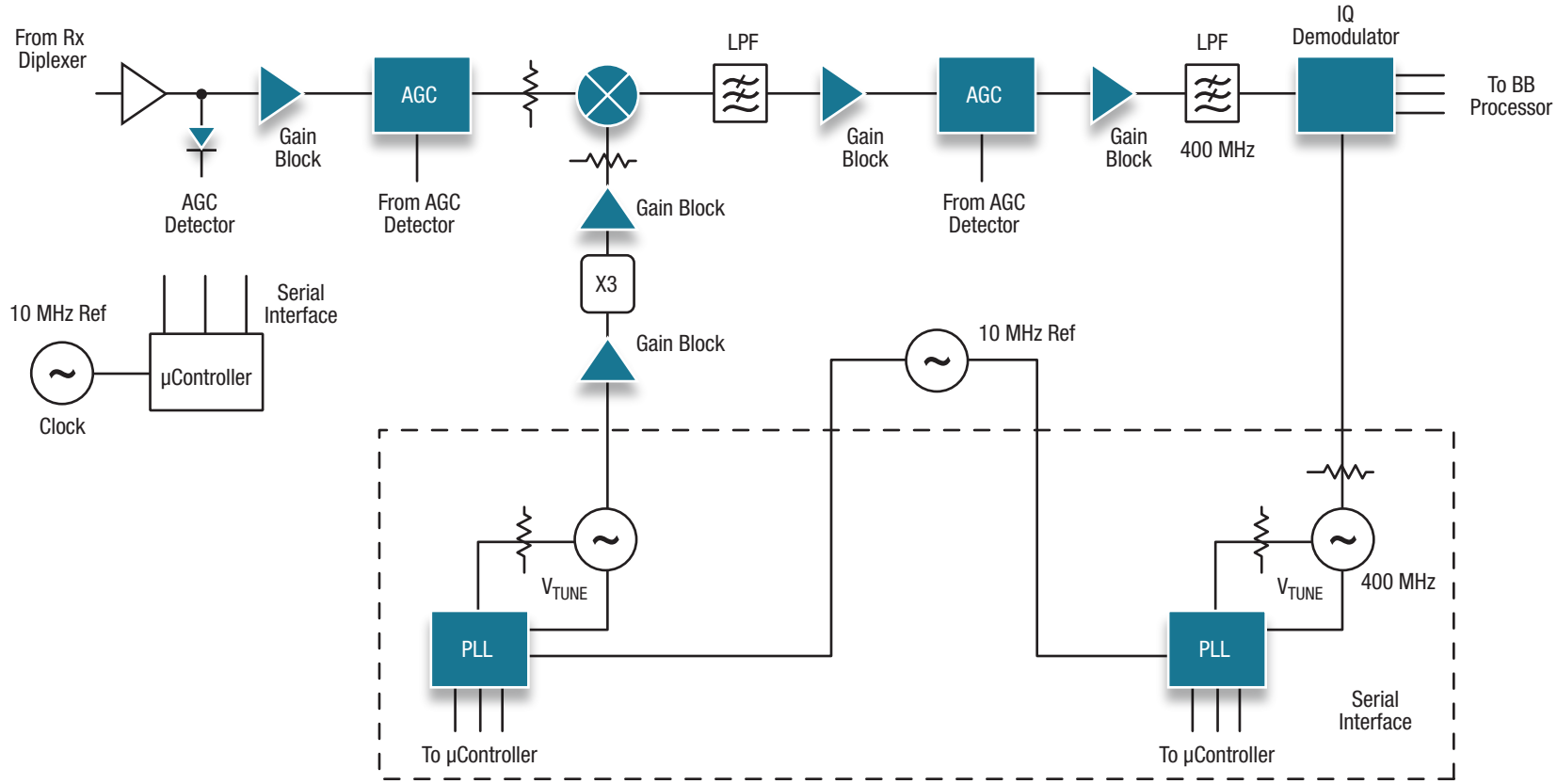
Part numbers link to product information